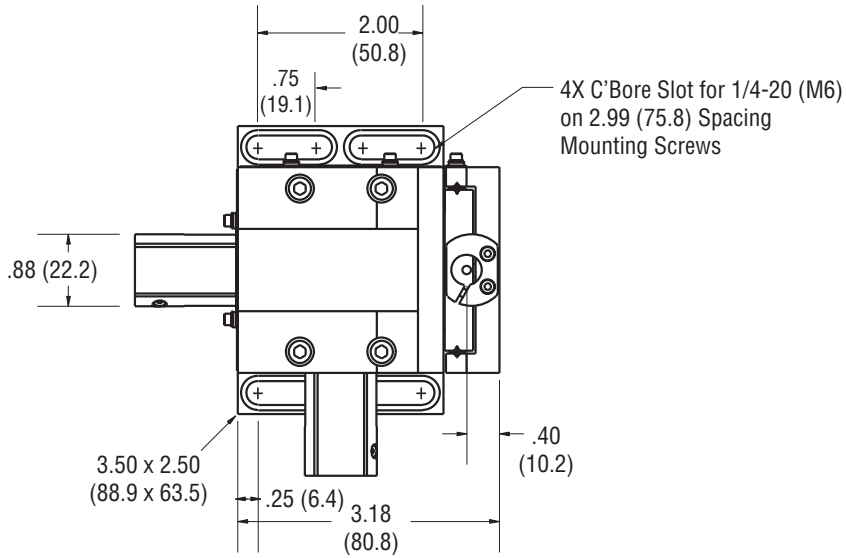

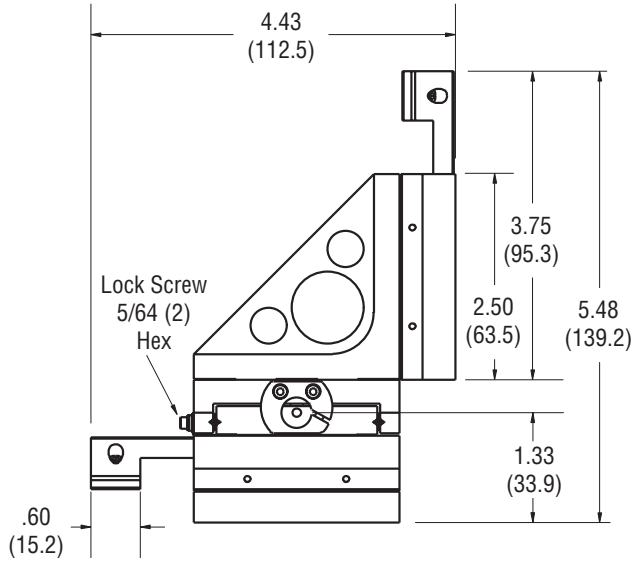

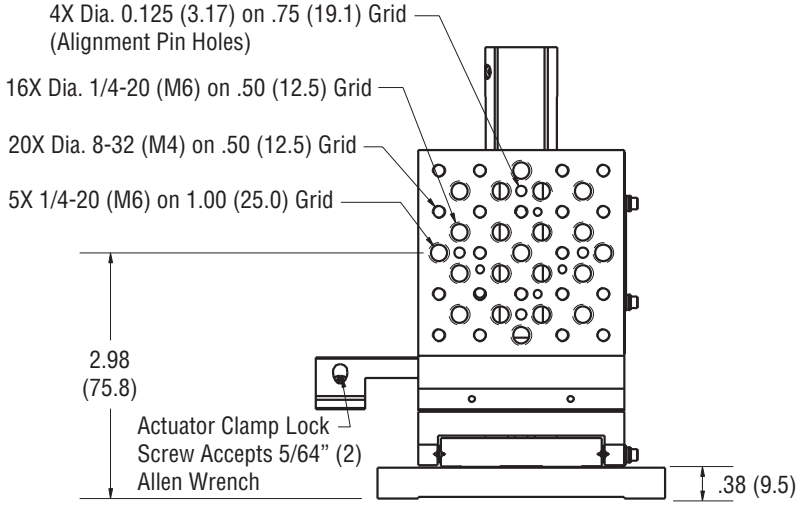

Shown is configuration of 9067-XYZ-L. 9067-XYZ-R has the Y-axis actuator on the opposite side of the stage

Newport