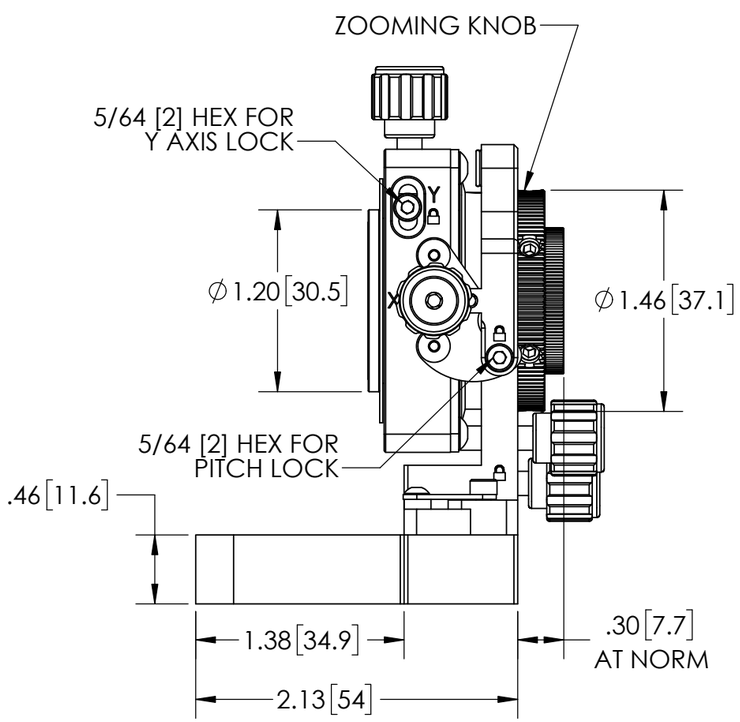

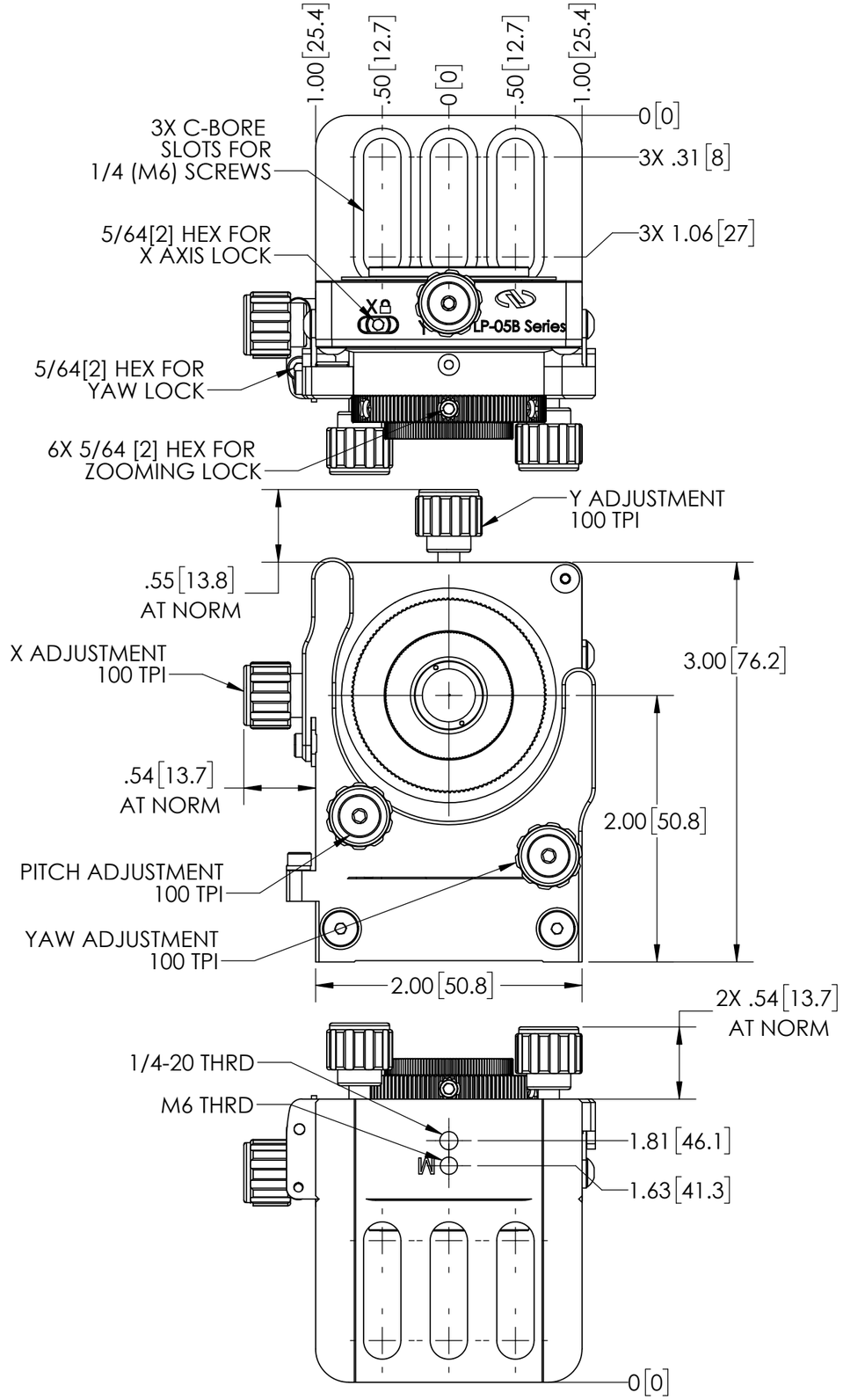

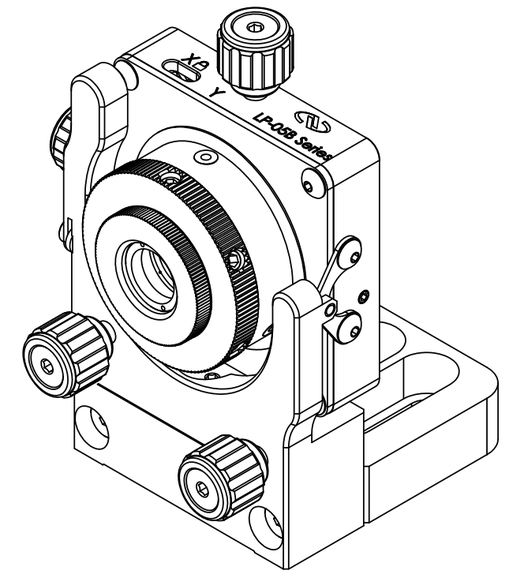

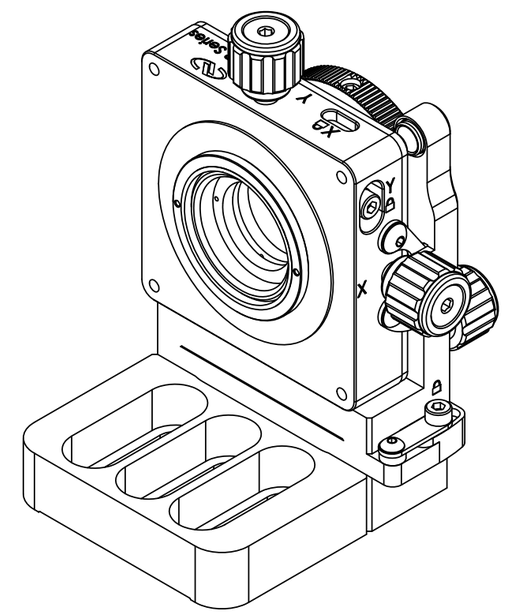

MODEL: LP-05B

mks | Newport